TIGER CRANES

Model 8653 Specifications

Model 8653 Specifications

Dimensional Specifications:

- 30' 6" Single Line Reach
- 30' 1" Double Line Reach
- 12.5' - 30.5' Hydraulic Boom Extension
- 31' Lifting Height
- 45" Storage Height
- 172" Overall Storage Length
- Ø18" Mounting Space Required
- 6 Bolt Mounting Pattern
- 3/8" X 120' Hoist Cable
- 1950 lbs. Operating Weight

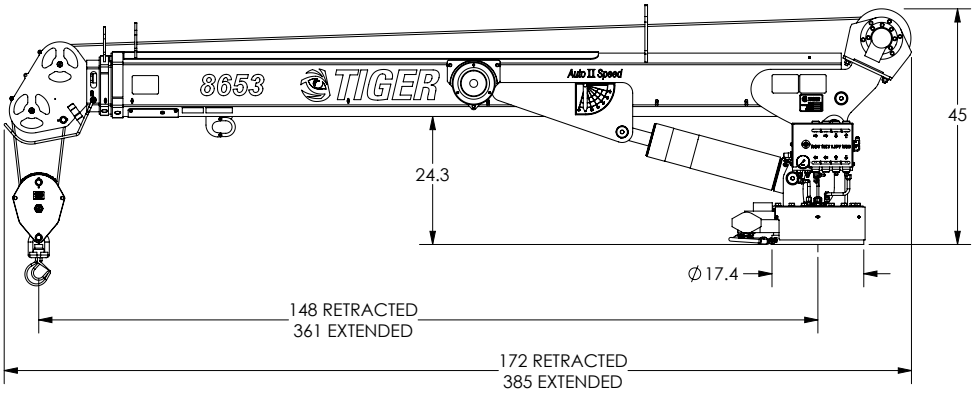

Performance Specifications:

- 50,000 ft-lb Crane Rating
- 54,300 ft-lb Maximum Crane Lifting Moment
- 8,600 lb Double Line Lift Capacity
- 13 second Boom Elevation Time
- 36 second Boom Extension Time
- 1.3 RPM Rotation Speed
- 68 FPM No Load Single Line Speed
- 400 Degrees of Rotation
- -12.5 Degrees to +82 Degrees Boom Angle

Standard Features:

- Wireless pistol grip control with high resolution LCD display for load percentage and diagnostics. Dual joysticks for selecting hydraulic functions with proportional control trigger. Also includes horn, boom lights, compressor, engine start/stop, engine speed control, and 3 auxiliary switches.
- Auto II Speed control reduces maximum speed on all functions when a load is sensed.
- 33' tether cable included for operation without batteries or in areas where radio transmission is not allowed.
- Anti two block & overload protection with condition indicators on remote.
- Stationary rotator gearcase.
- Sealed crane turret.
- Low profile jib head and anti two block mechanism.
- Integrated filtration with bypass condition indicator.
- 12 VDC DO3 10 GPM solenoids with manual overrides & LED On/Off indicator
- Hydraulic planetary hoist. Boom mounted for easier stowing.
- Crane lift and extension cylinders are equipped with counterbalance safety valves.
- This crane is designed to meet the requirements of ANSI/ASME B30.5 (2018) and OSHA 1910.180.

Minimum Requirements

- 19,500 lbs. GVW Rating
- 84" Cab to Axle
- 300,000 in-lb frame RBM
- 8 GPM @ 2975 PSI – open center hydraulics
- 50,000 ft-lb rated crane tower reinforcement and outrigger

877 1st Ave N.W. | Sioux Center, IA 51250 | Phone: 800.225.8789 | tigercranes.com

TIGER CRANES

Model 8653 Specifications

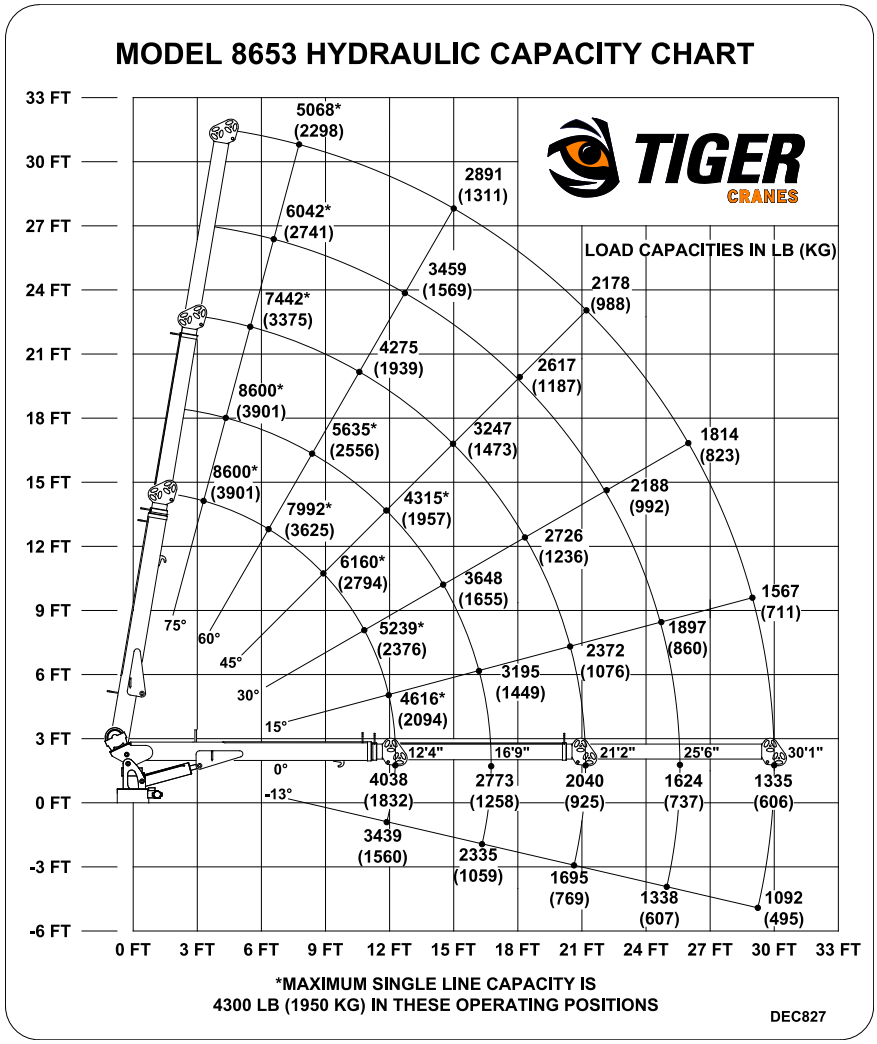
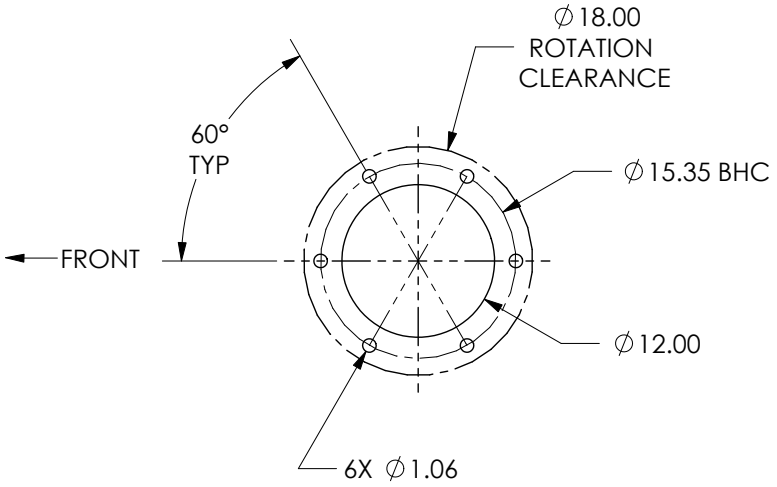
Bolt Hole Pattern